Flexible Elecraft Balun
Phil Salas AD5X

Elecraft (www.elecraft.com) sells a very compact and inexpensive ($25) balun kit rated at 150 watts of power. This balun comes with instructions showing how to wire it as either a 4:1 or 1:1 balun. After looking at my 4:1 version of this balun, I realized it would be easy to modify so it could be switched between either 4:1 or 1:1. Also, I wanted this balun to directly mount on the SO-239 on my IC-703.

To add the 4:1/1:1 switching capability, just scrape away a little of the silkscreen on the bottom of the printed circuit board and solder a DPDT slide switch to the board as shown in Photo "Bottom with Switch". Then wire from the switch to the printed circuit board as shown in the figure "Switch/PCB wiring". Next, cut the trace on the top of the printed circuit board where the white and red secondary wires tie together as shown in photo "PCB trace cut modification". The schematic of the re-wired balun is shown below.

To convert the RF input from a BNC to a SO-239, I used a single-hole mount SO-239 and held it in place against the printed circuit board with #14 bare copper wire that loops around the connector and solders to the connector and the two ground holes as shown in photos "SO-239 bottom" and "SO-239 Top". The completed balun, attached to my IC703, is shown in photo "IC703& balun".

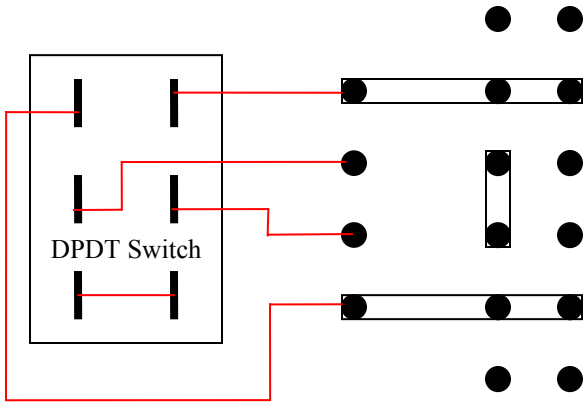


Switch/PCB Wiring

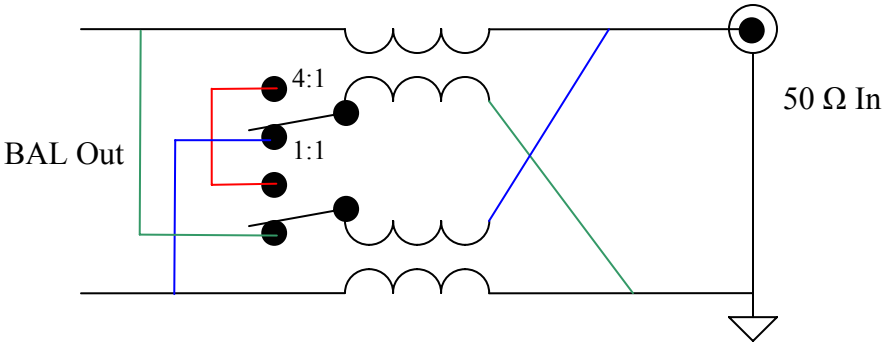


New Schematic: 4:1 & 1:1 Switchable Balun

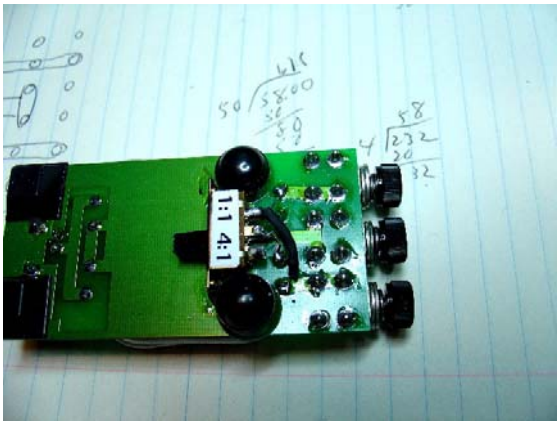

Bottom with Switch

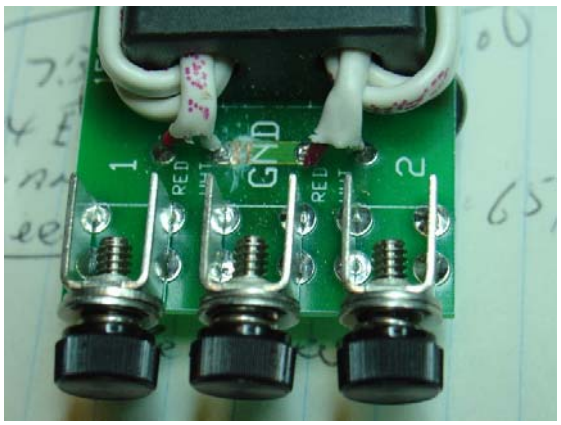

PCB trace cut modification

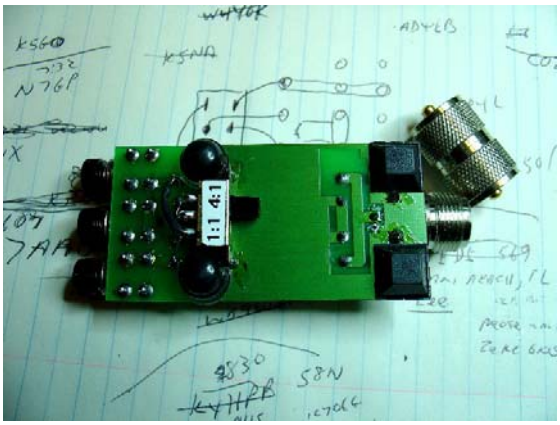

Bottom view with SO-239

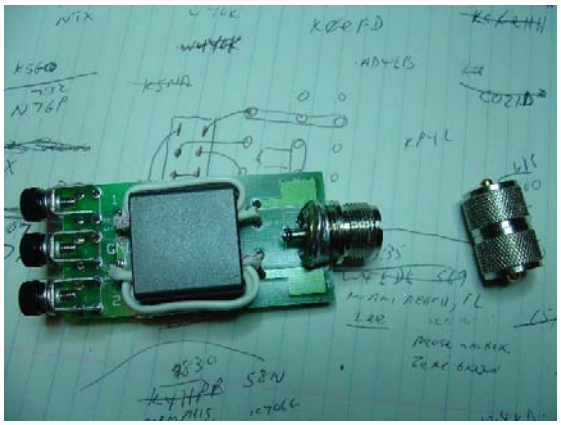
Top view with SO-239

Modified balun on IC-703